Installation Instructions

for use by heating contractor

VIESSMANN

Vitoflame 100
Oil Burner (VEM Series)
for Vitola 200 boiler

Heating input: 83 to 300 MBH
24 to 88 kW

VITOFLAME 100

Vitoflame 100 oil burner installed on a Vitola 200 boiler

C US

IMPORTANT

Read and save these instructions for future reference.

5285 462 v1.3 07/2005

Safety, Installation and Warranty Requirements

Please ensure that these instructions are read and understood before commencing installation. Failure to comply with the instructions listed below and details printed in this manual can cause **product/property damage**, **severe personal injury**, and/or **loss of life**. Ensure all requirements below are understood and fulfilled (including detailed information found in manual subsections).

■ **Licensed professional heating contractor**
The installation, adjustment, service, and maintenance of this equipment *must be* performed by a licensed professional heating contractor.

▶ *Please see section entitled "Important Regulatory and Installation Requirements".*

■ **Product documentation**
Read all applicable documentation before commencing installation. Store documentation near boiler in a readily accessible location for future reference by service personnel.

▶ *For a listing of applicable literature, please see section entitled "Important Regulatory and Installation Requirements".*

■ **Advice to owner**
Once the installation work is complete, the heating contractor must familiarize the system operator/ultimate owner with all equipment, as well as safety precautions/requirements, shut-down procedure, and the need for professional service annually before the heating season begins.

■ **Contaminated air**
Air contaminated by chemicals can cause by-products in the combustion process which are *poisonous* to inhabitants and destructive to Viessmann equipment.

▶ *For a listing of chemicals which cannot be stored in or near the boiler room, please see section entitled "Combustion Air Supply".*

■ **Carbon monoxide**
Improper installation, adjustment, service and/or maintenance can cause flue products to flow into living space. Flue products contain *poisonous* carbon monoxide gas.

▶ *For information pertaining to the proper installation, adjustment, service and maintenance of this equipment to avoid formation of carbon monoxide, please see sections entitled "Combustion Air Supply" in these instructions and "Venting Connection" in the Installation Instructions of the boiler.*

⚠ WARNING

Installers must follow local regulations with respect to installation of carbon monoxide detectors. Follow manufacturer's maintenance schedule of boiler.

■ **Fresh air**
This equipment requires fresh air for safe operation and must be installed ensuring provisions for *adequate combustion* and *ventilation air* exist.

▶ *For information pertaining to the fresh air requirements of this product, please see section entitled "Combustion Air Supply".*

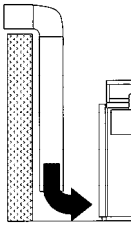

■ **Equipment venting**
Never operate boiler without an *installed venting system*. An improper venting system can cause carbon monoxide poisoning.

▶ *For information pertaining to venting and chimney requirements, please see section entitled "Venting Connection" in the Installation Instructions of the boiler. All products of combustion must be safely vented to the outdoors.*

■ **Warranty**
Information contained in this and related product documentation must be read and followed. *Failure to do so renders warranty null and void.*

5285 462 v1.3

Contents

5285 462 v1.3

Important Regulatory and Installation Requirements

■ Installation

Please carefully read this manual prior to attempting installation. Any warranty is null and void if these instructions are not followed.

The burner installation shall be in accordance with the regulations of the authorities having jurisdiction or, in the absence of such requirements, in accordance with National Codes. In Canada use CSA B-139 for oil boiler installations. In the U.S. use NFPA 31, "Standard for the Installation of Oil Burning Equipment" for oil boiler installations. Always use latest editions of codes.

All electrical wiring is to be done in accordance with the applicable codes. In Canada use the Canadian Electrical Code CSA C22.1 and/or local codes. In the U.S.A. use the latest edition of the National Electrical Code ANSI/NFPA 70.

We offer frequent installation and service seminars to familiarize our partners with our products. Please inquire.

■ Working on the equipment

The installation, adjustment, service, and maintenance of this boiler and burner must be done by a **licensed professional heating contractor** who is qualified and experienced in the installation, service, and maintenance of oil-fired hot water heating equipment. There are no user serviceable parts on the boiler, burner, or control.

Ensure **main power** supply to equipment, the heating system, and all external controls has been **deactivated**. **Close** main oil **supply valve**. Take precautions in all instances to avoid accidental activation of power during service work.

■ Literature

Literature applicable to installation of the Vitoflame oil burner, VEM Series
- Installation Instructions
- Start-up/Service Instructions
- Operating Instructions and User's Information Manual
- Installation codes mentioned in this manual

■ Approvals and Standards

Where required by the authority having jurisdiction, the installation must conform to the Standard for Controls and Safety Devices for Automatically Fired Boilers, ANSI/ASME CSD-1.

Follow all local codes.

The oil burner/boiler combinations as shown in Section 2.3 are approved by CSA to the latest editions of the following standards:

- CAN/CSA - B140.2.1 - Oil Burners, Atomizing Type
- UL 296 - Oil Burners
- CAN/CSA - C22.2 No. 0 - General Requirements - Canadian Electrical Code, Part II
- CSA C22.2 No. 3 - Electrical Features of Fuel Burning Equipment

About these Installation Instructions

Take note of all symbols and notations intended to draw attention to potential hazards or important product information. These include "WARNING", "CAUTION", and "IMPORTANT". See below.

WARNING

Indicates an imminently hazardous situation which, if not avoided, could result in death, serious injury or substantial product/property damage.

→ *Warnings draw your attention to the presence of potential hazards or important product information.*

CAUTION

Indicates an imminently hazardous situation which, if not avoided, may result in minor injury or product/property damage.

→ *Cautions draw your attention to the presence of potential hazards or important product information.*

IMPORTANT

→ *Helpful hints for installation, operation or maintenance which pertain to the product.*

→

→ *This symbol indicates that additional, pertinent information is to be found in column three.*

→ *This symbol indicates that other instructions must be referenced.*

Product Information

The Viessmann Vitoflame 100, VEM Series oil burner is intended for use with the Vitola 200, VB2 Series hot water heating boiler.

This burner is factory calibrated for use with fuel oil #2 or lighter. No other fuel shall be used.

Each burner is factory tested on the correct boiler size with the appropriate oil nozzle. The factory test includes oil flow rate and combustion measurements. Do not overfire or underfire the burner. The burner is for use with the rating plate input only. A record of the flow rate and combustion results is being provided with each burner.

Local performance must be verified in the field and adjusted, if necessary, via the air adjustment on the burner.

Combustion Air Supply

WARNING

This burner/boiler combination requires clean fresh air for safe operation and must be installed so that there are provisions for adequate combustion and ventilation air.

Provisions for combustion and ventilation air must be made in accordance with "CSA B-139 - Installation Code for Oil Burning Equipment" (Canada), "NFPA 31 - Installation of Oil Burning Equipment" (U.S.) and local codes.

The recommended air supply duct size (see Technical Data on following page) should be used when installing a round duct to supply combustion air from the outside.

WARNING

The boiler must not be located in areas or rooms where chemicals containing chlorine, bromine, fluorine, or other corrosive chemicals are stored. Examples include refrigerants, bleach, paint, paint thinner, hair spray, cleaning solvents, water softener salt, etc. The combustion air must not be contaminated with any amount of the above mentioned chemicals.

Do not locate the boiler where high humidity or high levels of dust exist. If above criteria are not properly observed and boiler damage results, any warranty on the boiler and related components will be null and void.

If burner activation occurs prior to completion of, or renovations to, the mechanical room, dirt and dust caused by construction will necessitate a cleaning and recalibration of the burner after all construction work is complete.

During drywall sanding the boiler should be turned off and properly covered including the controls. It is important for the burner to receive clean combustion air when operated during that time. All controls must be protected from dust and dirt.

Technical Data

For fuel oil #2 or lighter

Burner Model	Model No.	VEM-18	VEM-22	VEM-33	VEM-40	VEM-50	VEM-63
Boiler	Model No.	VB2-18	VB2-22	VB2-33	VB2-40	VB2-50	VB2-63
Input	MBH	83	107	135	170	219	300
	kW	24	31	39	50	64	88
Consumption at oil discharge pressure stated	GPH	0.59	0.76	0.96	1.21	1.56	2.15
	ltr/h	2.23	2.87	3.63	4.58	5.90	8.10
	psig	240	170	170	180	180	175
Voltage	V	120	120	120	120	120	120
Frequency	Hz	60	60	60	60	60	60
Amperage	A	2.0	2.0	2.0	2.0	2.0	2.0
Power consumption	Watt	90	90	90	90	90	90
Motor revolutions	rpm	3450	3450	3450	3450	3450	3450
Max. oil pump flow capacity	ltr/h	45	45	45	45	45	45
Connections (flare) inside threads of supply and return oil lines	inches	$^3/_8$	$^3/_8$	$^3/_8$	$^3/_8$	$^3/_8$	$^3/_8$
Recommended combustion air supply duct size - round duct ∅	inches	5	5	6	7	8	8
Depth[1]	inches	13	13	13	15	15	15
	mm	335	335	335	370	370	370
Width[1]	inches	21	21	21	26	26	26
	mm	535	535	535	650	650	650
Height[1]	inches	23	23	23	26	26	26
	mm	580	580	580	660	660	660
Weight *(shipping weight)*	lbs	46	46	46	49	50	50
	kg	21	21	21	22	22.5	22.5

[1] *Dimensions include burner hood.*

IMPORTANT

Burners are approved for one input each. Do not change input of burner by oversizing or undersizing of nozzle.

Installing the Burner

All component parts required for burner installation are part of the standard equipment shipped with the burner.

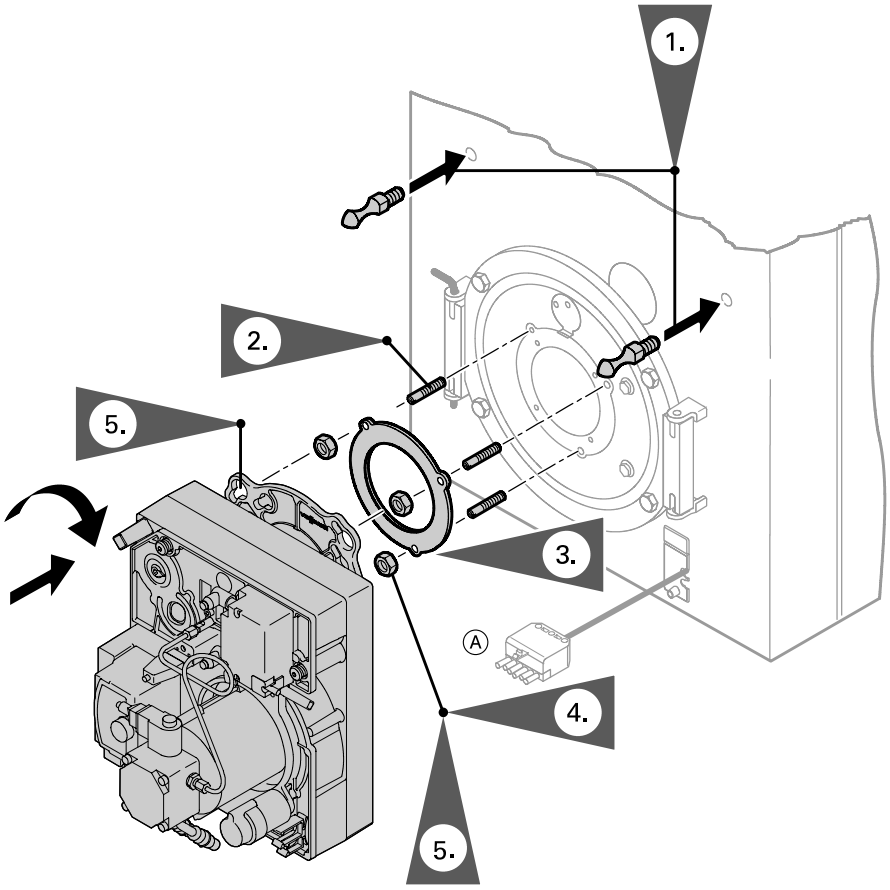

Fig. 1
Mounting burner on combustion chamber door
Ⓐ 7-pole 41 plug from boiler control

1. Fasten the two burner hood holding mounts (supplied) on front panel of boiler.
2. Insert M8 studs (x3) into outer threaded holes on combustion chamber door.
3. Slide burner housing gasket onto studs.
4. Loosely screw M8 nuts onto studs.
5. Mount burner housing by sliding the key holes over nuts onto the studs. Rotate housing clockwise and tighten nuts.
6. Install oil filter (supplied) either on the left or right side panel of boiler, depending on swing direction of combustion chamber door.

Installation of Blocked Vent Safety Switch (for Canadian oil burning installations only)

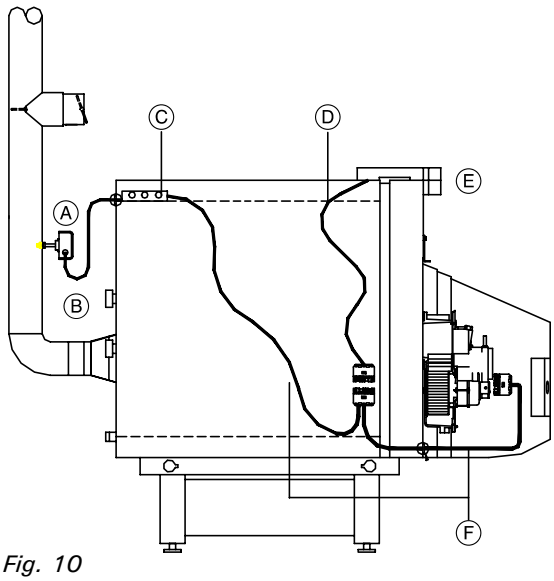

Fig. 10

Legend

Ⓐ Blocked vent safety switch
Ⓑ Field supplied wiring
Ⓒ Junction box
Ⓓ 41 plug-in connector cable from Vitotronic control
Ⓔ Vitotronic control
Ⓕ 41 plug-in adaptor of the burner cable and blocked vent safety switch

See section entitled "Enclosure Panel Installation" in the Vitola 200 Installation Instructions.

Installation Instructions Blocked Vent Safety Switch

1. Run the 41 plug-in connector cable of the Vitotronic control down behind the front panel of the boiler and connect to the 41 plug-in adaptor of the burner cable and blocked vent safety switch (see *Fig. 10*).

CAUTION

Always route all cables between nylon-backed insulation and metal enclosure panels. Never allow cables to come into direct contact with the pressure vessel.

2. The 4x4 junction box of the adaptor cable can be placed on the top of the boiler underneath the top panel.

3. Install blocked vent switch (see enclosed FieldControls WMO-1 Installation Instructions).

4. Run BX cable (armored cable) or any other approved wire (required by local authorities having jurisdiction) from switch to junction box.

5. Connect wire to the 3-pole terminal strip inside the junction box (see *Fig. 11*).

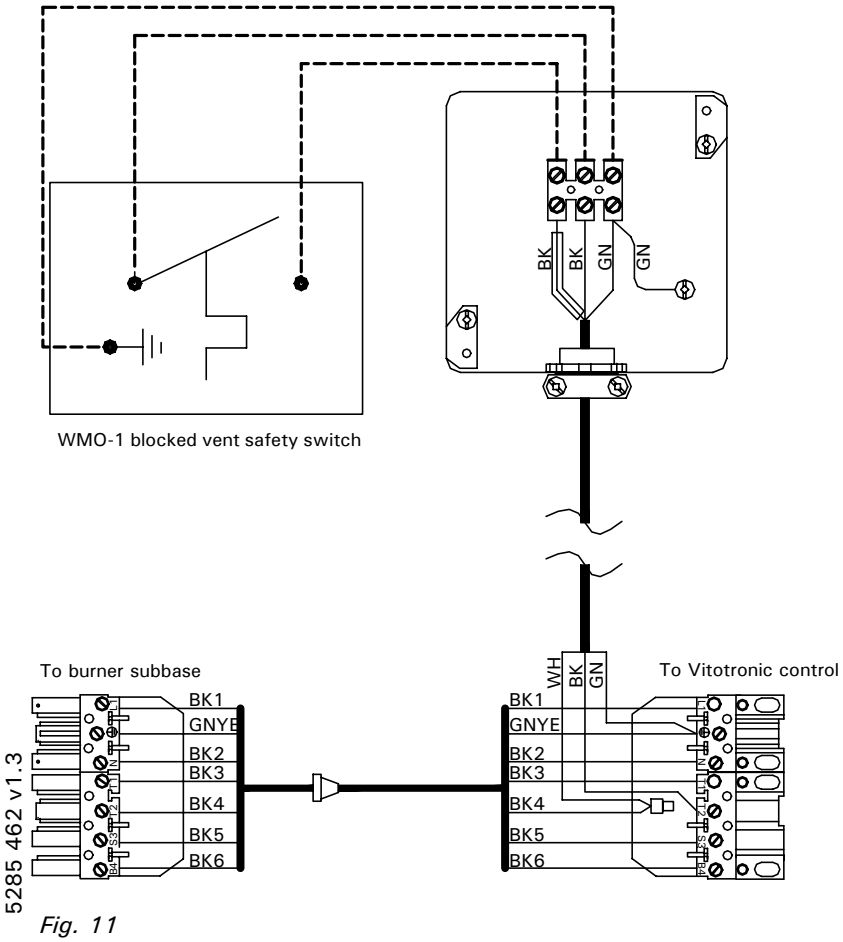

Fig. 11

Legend

BK	Black
GN	Green
GNYE	Green/Yellow
WH	White

Oil Supply

Oil cartridge assembly

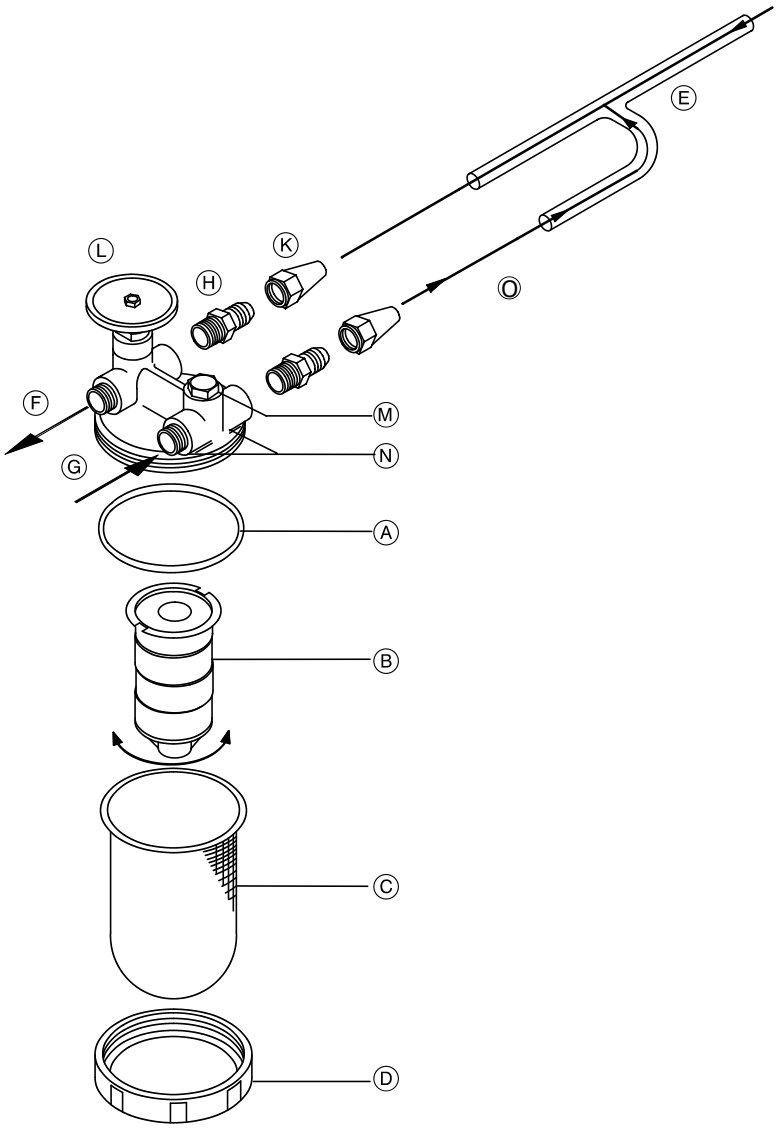

Fig. 2
Oil cartridge assembly

Ⓐ O-ring
Ⓑ Filter cartridge
Ⓒ Plastic cup
Ⓓ Brass nut
Ⓔ Oil supply
Ⓕ Oil supply to burner via flexible oil line (red)
Ⓖ Oil return from burner via flexible oil line (blue)
Ⓗ Filter adaptor
Ⓚ Flare nut
Ⓛ Manual oil shutoff valve
Ⓜ Built-in flow check valve
Ⓝ Grooves for mounting bracket
Ⓞ Single-pipe copper conversion tee for single-pipe oil supply

1. Check that all surfaces are clean before installing new O-ring Ⓐ supplied with replacement filter cartridge.

2. Set O-ring Ⓐ in place and mount new filter cartridge Ⓑ.

3. Attach clear plastic cup Ⓒ and tighten brass nut Ⓓ.

IMPORTANT

Never tighten brass nut with a tool; hand tighten only. Cap and O-ring might deform and leak air.

IMPORTANT

The flare adaptors are tapped 3/8" BSP (British straight pipe) at the factory. Replacement flare adaptors must be ordered from Viessmann. Do not use 3/8" NPT flare adaptor as replacement.

Use only approved pipe sealant on filter adaptor to filter housing.

CAUTION

When new cartridge assembly is mounted, remove brass nut and plastic cup. Check for clean and proper O-ring and O-ring seats before starting oil flow.

CAUTION

Never use Teflon tape or compression fittings in fuel oil piping.

Oil Supply *(continued)*

Oil supply in two-pipe system

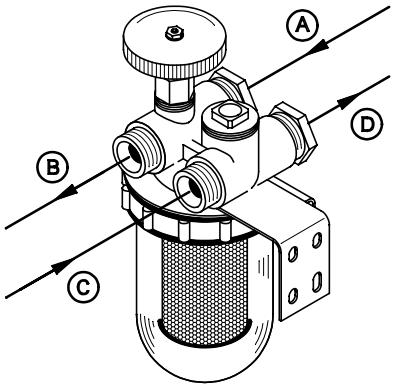

Fig. 3
Oil filter in two-pipe system

Viessmann strongly recommends two-pipe oil supply piping wherever possible. For optimum air venting and oil pump performance use a two-pipe oil supply.

Ⓐ oil line from tank
Ⓑ to oil pump on burner
Ⓒ from oil pump on burner
Ⓓ return to tank

A Viessmann oil filter assembly and flexible oil lines must be used in the oil supply system. The red flexible oil line connects the red manual valve side of the filter assembly to the inlet (suction) side of the oil pump. The blue flexible oil line connects the check valve side of the oil filter assembly to the return side of the oil pump.

The oil pump is shipped with the by-pass plug installed. The two flexible oil lines are to be used for all installations. The copper tee is used to convert to a single-pipe supply from tank to burner oil filter. See page 10.

Elevated tank (two-pipe)

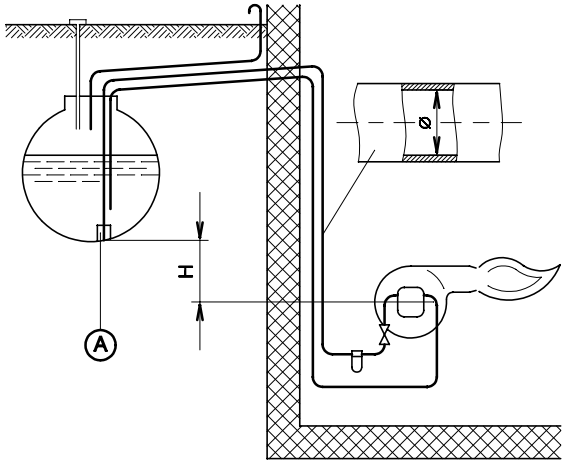

Ⓐ foot valve

Fig. 4
Oil supply (two-pipe system), elevated tank

Observe oil supply line dimensions on table below.
The oil pressure within the oil supply system must not exceed 10 psig / 0.7 bar.

CAUTION

Pressurized or gravity feed installations must not exceed 10 psig / 0.7 bar on inlet line or return line at the pump. A pressure greater than 10 psig / 0.7 bar may cause damage to the shaft seal.

CAUTION

Ensure that there are absolutely no leaks on any oil lines and connections! Leaks in the oil lines draw in air, causing incomplete combustion.

Suction height H		Inside diameter of suction line			
ft	m	3/8″	10 mm	1/2″	13 mm
		Maximum supply line length (ft. / m)			
13	4.0	328 ft.	100 m	328 ft.	100 m
11 ½	3.5	321	98	328	100
9 ¾	3.0	299	91	328	100
8 ¼	2.5	279	85	328	100
6 ½	2.0	260	79	328	100
5	1.5	236	72	328	100
3 ¼	1.0	216	66	328	100
1 ½	0.5	197	60	328	100

For #2 fuel oil, 6.0 CST viscosity is calculated with four 90° pipe elbows, one shut-off valve, and one foot valve.

Oil Supply *(continued)*

Tank below or at same level as burner (two-pipe)

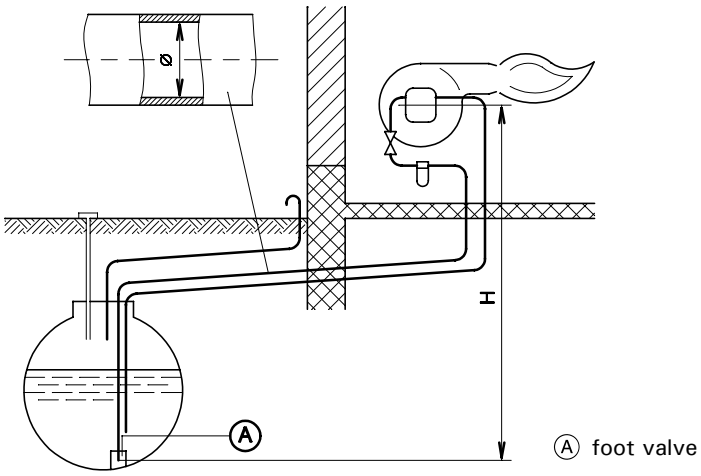

Fig. 5
Oil supply (two-pipe system), tank below or at same level as burner

Observe oil supply dimensions on table below.

The height difference (H) between the oil burner pump and the tank must not exceed 11.5 ft / 3.5 m. Greater heights will cause high vacuum pressures, burner malfunction and eventually, burner failure.

CAUTION

Ensure that there are absolutely no leaks on any oil lines and connections! Leaks in the oil lines draw in air, causing incomplete combustion.

Suction height H		Inside diameter of suction line			
ft	m	3/8″	10 mm	1/2″	13 mm
		Maximum supply line length (ft. / m)			
0	0	174 ft.	53 m	328 ft.	100 m
– 1 ½	–0.5	154	47	328	100
– 3 ¼	–1.0	135	41	325	99
– 5	–1.5	112	34	276	84
– 6 ½	–2.0	92	28	233	68
– 8 ¼	–2.5	72	22	176	53
– 9 ¾	–3.0	49	15	121	37
–11 ½	–3.5	30	9	72	22

Oil Supply *(continued)*

Oil supply in single-pipe system

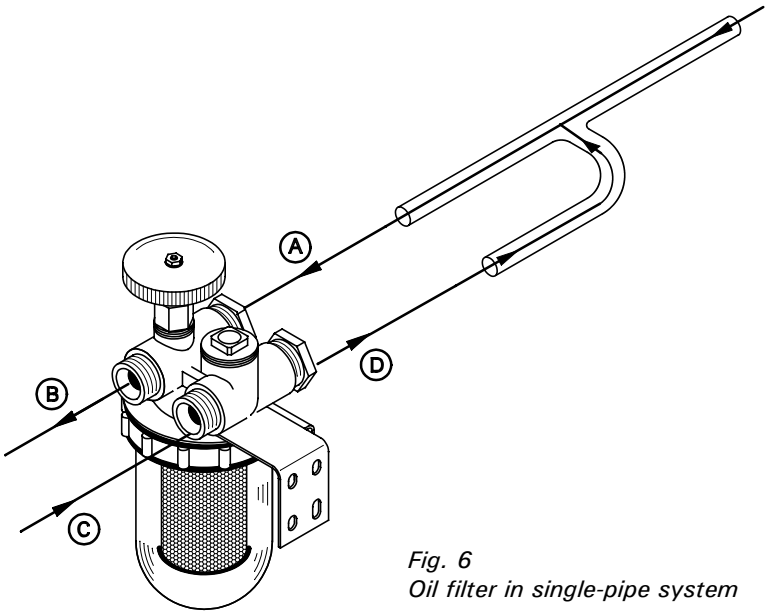

Fig. 6
Oil filter in single-pipe system

A Viessmann oil filter assembly must be used in the oil supply system.

A copper tee must be used to connect the two-pipe filter assembly to a single-pipe oil supply system.

Ⓐ oil line from tank
Ⓑ to oil pump on burner
Ⓒ from oil pump on burner
Ⓓ return to tank

Oil Supply *(continued)*

Elevated tank, tank below or at same level as burner (single-pipe)

A Viessmann oil filter assembly must be used in the oil supply system.
A copper tee must be used to connect the two-pipe filter assembly to a single-pipe oil supply system.
For single-pipe oil supply installations Viessmann recommends the use of an automatic air removal vent which is installed between the oil filter assembly and the burner.

Size oil supply line according to table on following page. Suction height H (see illustrations below) between the oil burner pump and the foot valve of the oil tank must not exceed 13 ft. / 4 m in an installation with the oil tank below the burner. A suction height exceeding 13 ft. / 4 m can lead to increased pump noise and wear on the pump.

If the suction height or the maximum supply line length in an installation with the tank below the burner is larger than stated in the table on the following page, a single-pipe oil “lift” system is required; in this case the pressure at the burner oil intake may at most be 10 psig / 0.7 bar and the burner must be protected with an additional solenoid coil.

If the oil supply must be converted from a two-pipe system to a single-pipe system, please observe supply line diameters provided in the illustrations below.

Elevated tank

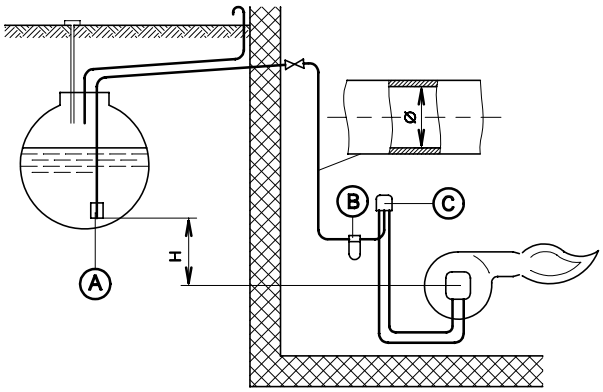

Fig. 7
Elevated oil tank

Tank below or at same level as burner

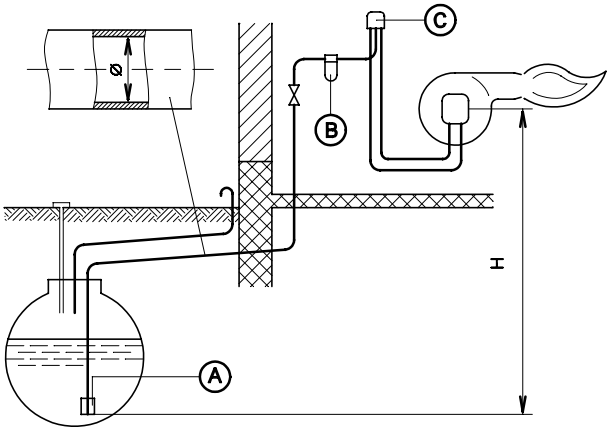

Fig. 8
Oil tank below burner

Ⓐ Foot valve
Ⓑ Oil filter
Ⓒ Air removal vent

Oil Supply *(continued)*

See Fig. 7 on previous page.

Suction height H		Rated boiler input (in MBH)							
		83 to 107		135 to 219		300			
		Inside diameter of suction line							
		¼" / 6 mm		¼" / 6 mm		¼" / 6 mm		¾" / 8 mm	
ft.	m	Max. supply line length in ft. / m*1							
13	4.0	328	100	328	100	328	100	328	100
11½	3.1	328	100	328	100	328	100	328	100
9¾	3.0	328	100	328	100	328	100	328	100
8¼	2.5	328	100	328	100	328	100	328	100
6½	2.0	328	100	328	100	318	97	328	100
5	1.5	328	100	328	100	295	90	328	100
3¼	1.0	328	100	328	100	269	82	328	100
1½	0.5	328	100	328	100	243	74	328	100

See Fig. 8 on previous page.

Suction height H		Rated boiler input (in MBH)					
		83 to 107		135 to 219		300	
		Inside diameter of suction line					
		¼" / 6 mm		¼" / 6 mm		¼" / 6 mm	
ft.	m	Max. supply line length in ft. / m*1					
0	0	328	100	328	100	328	100
−1½	−0.5	328	100	328	100	328	100
−3¼	−1.0	328	100	328	100	328	100
−5	−1.5	328	100	276	84	328	100
−6½	−2.0	328	100	226	69	328	100
−8¼	−2.5	328	100	174	53	276	84
−9¾	−3.0	246	75	121	37	194	59
−11½	−3.5	144	44	72	22	115	35
−13	−4.0	39	12	20	6	33	10

**1 At a total pressure drop of 5.25 psig/0.35 bar for #2 fuel oil with 6.0 CST viscosity taking into account 4 x 90° elbows, 1 shutoff valve, 1 foot valve and 1 air removal vent.*

CAUTION

Ensure that there are absolutely no leaks on any oil lines and connections! Leaks in the oil lines draw in air, causing incomplete combustion.

Electrical Connection

All power for the burner is supplied through a 7-pole 41 plug from the boiler control.
Connect 7-pole 41 plug of the control into the 7-pole 41 plug of the burner subbase. Ensure plugs snap together, making a clicking sound.

Do not interchange connections "L1" and "N" at the power supply connection of the control.

*For **Wiring Diagram** see Vitoflame Start-up/Service Instructions.*

Installing the Burner Hood

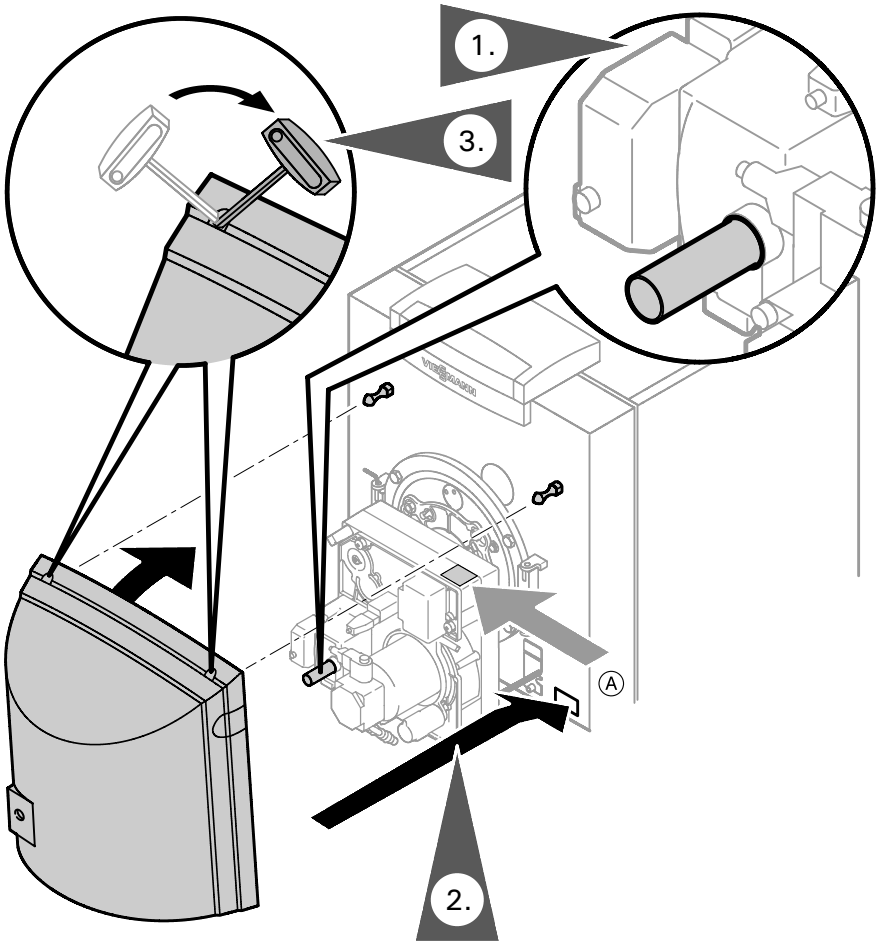

Ⓐ Burner rating plate

1. Check whether reset extension is installed; if required install on reset button.

   Mount reset extension on reset button and snap into place, pressing lightly.

2. Hook claws of burner hood into boiler enclosure panel and pull upward to snap into place.

3. Secure boiler hood to holding mounts by turning lock mechanism clockwise using a Viessmann Allen key (supplied).

Start-up and Burner Adjustment

Vitoflame Start-up/Service Instructions

Viessmann Manufacturing Company (U.S.) Inc.
45 Access Road
Warwick, Rhode Island • 02886 • USA
Tel. (401) 732-0667 • Fax (401) 732-0590
www.viessmann-us.com • mail@viessmann-us.com

Viessmann Manufacturing Company Inc.
750 McMurray Road
Waterloo, Ontario • N2V 2G5 • Canada
Tel. (519) 885-6300 • Fax (519) 885-0887
www.viessmann.ca • mail@viessmann.ca

5285 462 v1.3